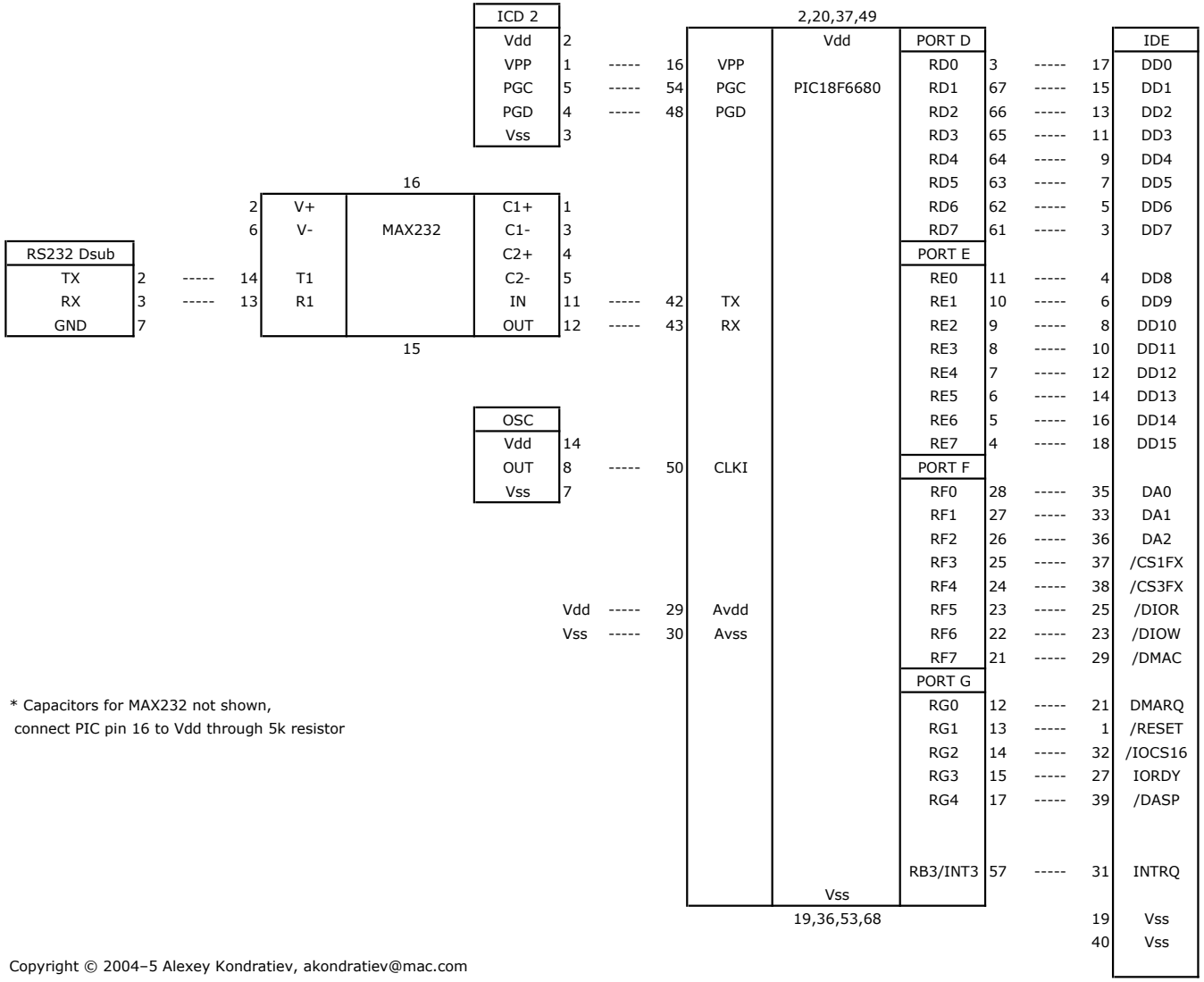


* Capacitors for MAX232 not shown,
connect PIC pin 16 to Vdd through 5k resistor

Copyright © 2004–5 Alexey Kondratiev, akondratiev@mac.com